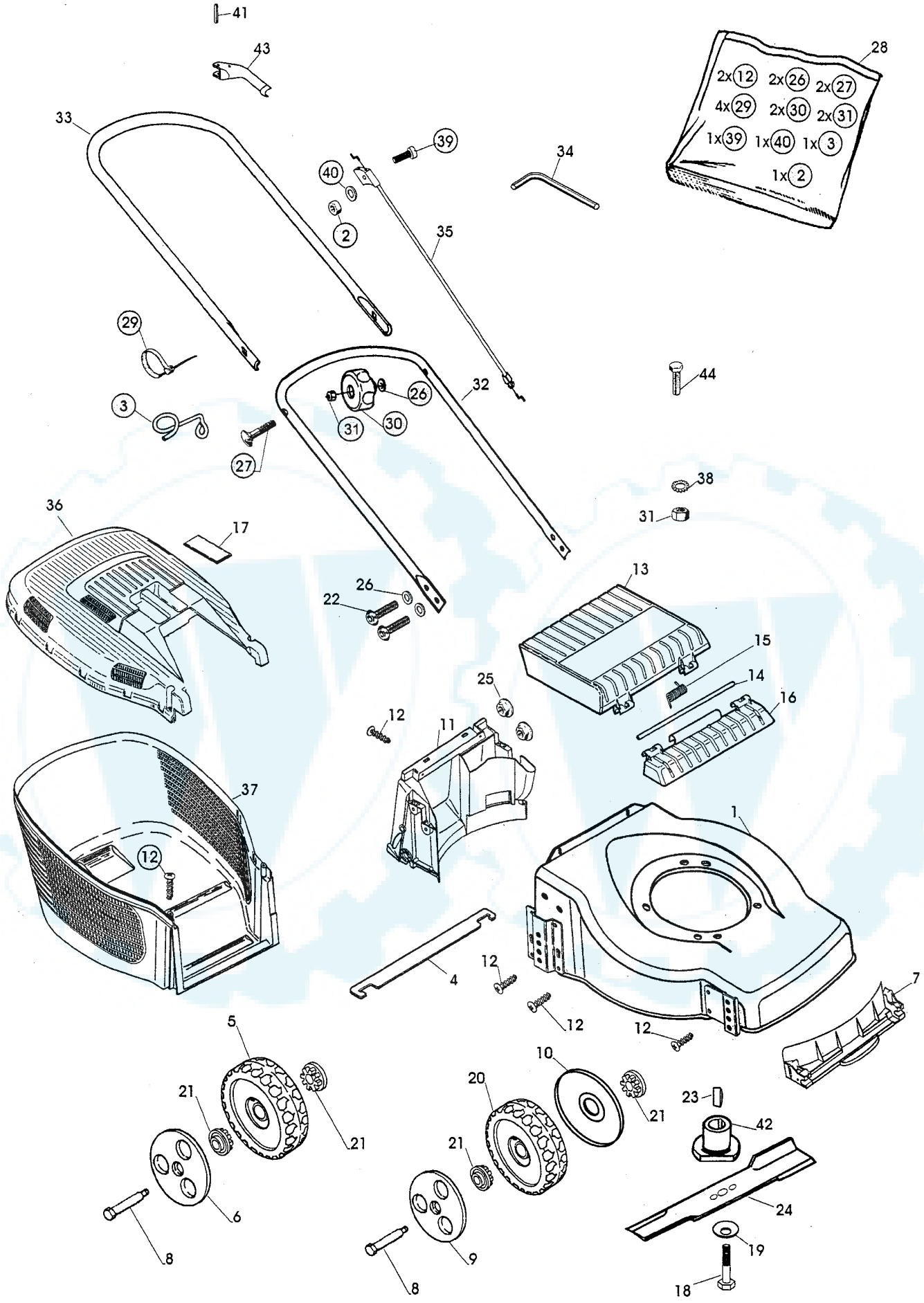
41
43
28
2x12 2x26 2x27
4x29 2x30 2x31
1x39 1x40 1x3
1x2
33
39
34
40
2
35
29
44
32
26
3
31
30
27
38
36
31
17
13
26
22
15
14
25
16
12
11
37
1
12
4
12
7
12
12
5
10
21
20
23
21
21
42
21
6
24
8
9
19
8
18

B054